Funk™
12700 HMD Transmission

Industrial Drivetrain Specifications

JOHN DEERE

Dimensions

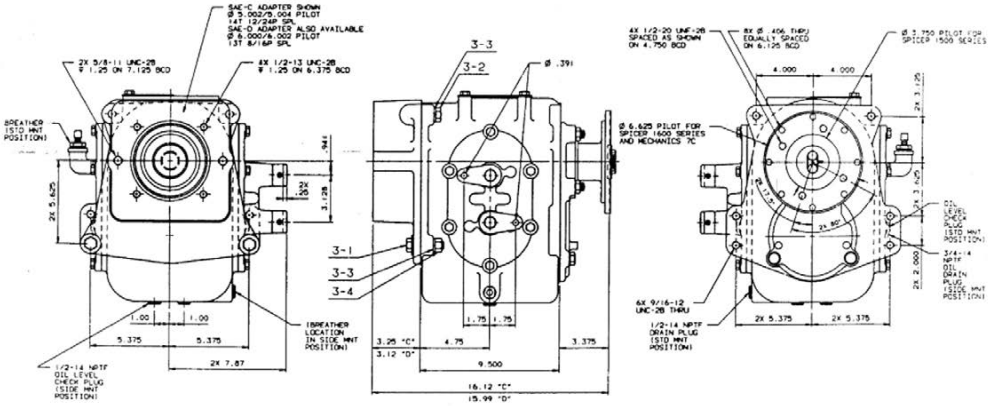

Ratings

Input power (max)	104 kW (140 hp)
Input torque (max)	407 Nm (300 lb-ft)
Input no load speed (max)	2500 rpm

General data

Motor adapters	SAE C and D
Shift options	Hydraulic, Mechanical
Approximate dry weight	88 kg (194 lb)
Oil capacity	4.4 L (4 qt)
Oil type	MIL-L-2105-C or API classification GL-5
Speeds	4
Configuration	In-line

Gear ratio (helical gears, sliding collar shift)

Low	2nd	3rd	High
6.27:1	3.12:1	1.75:1	1:1

Splines	
Input	SAE 14-tooth 12/24 DP
	SAE 13-tooth 8/16 DP
Parking brake	Drum-type
Output Fittings	Adapts to Spicer series 1500 and 1600 mechanics 7C U-joint flange yoke
Applications	Dozing machines, motor graders, railway vehicles, sweepers, pavers, and virtually any equipment requiring controlled travel speed.

Features and benefits

Controlled ground speed at full engine power

- Available to use with applications up to 104 kW (140 hp)
- 2500 rpm max input, no load speed

Multiple gear ratios in four-speed versions

- Covers low-speed working range through high-gear travel speeds
- Wide speed variance in each gear range

Selection of SAE hydraulic input motor mountings

- SAE C and D mounts to utilize input hydraulics to best fit the application

John Deere Power Systems
3801 W. Ridgeway Ave.
PO Box 5100
Waterloo, IA 50704-5100
Phone: 800.553.6446
Fax: 319.292.5075

All values at rated speed and power with standard options unless otherwise noted. Specifications and design subject to change without notice.

Litho in U.S.A. (17-01) © 2017 JOHN DEERE